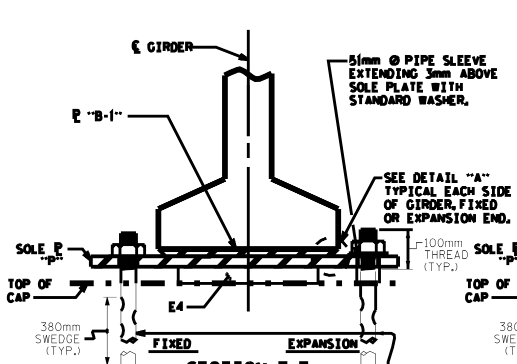


SECTION E-E

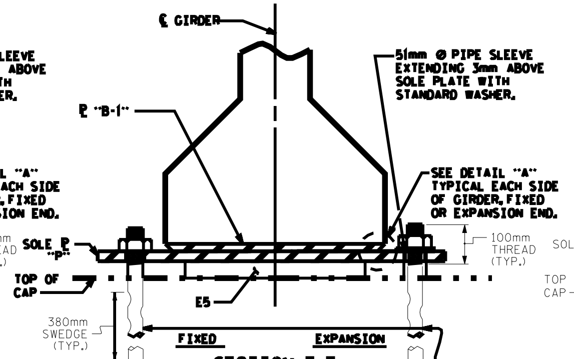


SECTION E-E

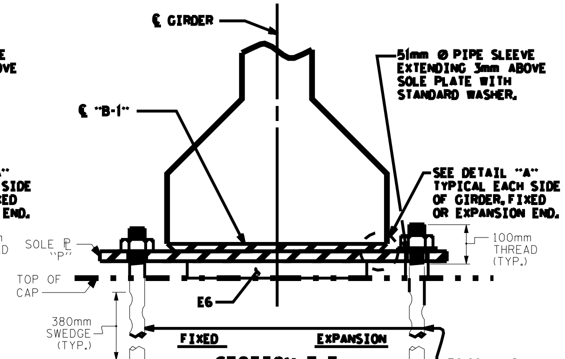


SECTION E-E

# NOTES

AT ALL FIXED POINTS OF SUPPORT, NUTS FOR ANCHOR BOLTS ARE TO BE TIGHTENED FINGER TIGHT AND THEN BACKED OFF ½ TURN. THE THREAD OF THE NUT AND BOLT SHALL THEN BE BURRED WITH A SHARP POINTED TOOL.

THE 51mm ⌀ PIPE SLEEVE SHALL BE CUT FROM SCHEDULE 40 PVC PLASTIC PIPE. THE PVC PLASTIC PIPE SHALL MEET THE REQUIREMENTS OF ASTM D1785.

STEEL SOLE PLATES, ANCHOR BOLTS, NUTS, AND WASHERS SHALL BE GALVANIZED IN ACCORDANCE WITH THE STANDARD SPECIFICATIONS.

PRIOR TO WELDING, GRIND THE GALVANIZED SURFACE OF THE PORTION OF THE EMBEDDED PLATE AND SOLE PLATE THAT ARE TO BE WELDED. AFTER WELDING, DAMAGED GALVANIZED SURFACES SHALL BE REPAIRED IN ACCORDANCE WITH THE STANDARD SPECIFICATIONS.

WHEN WELDING THE SOLE PLATE TO THE EMBEDDED PLATE IN THE GIRDER, USE TEMPERATURE INDICATING WAX PENS, OR OTHER SUITABLE MEANS, TO ENSURE THAT THE TEMPERATURE OF THE SOLE PLATE DOES NOT EXCEED 149°C. TEMPERATURES ABOVE THIS MAY DAMAGE THE ELASTOMER.

SOLE PLATE "P", BOLTS, NUTS, WASHERS, AND PIPE SLEEVE SHALL BE INCLUDED IN THE PAY ITEM FOR PRESTRESSED CONCRETE GIRDERS.

ANCHOR BOLTS SHALL MEET THE REQUIREMENTS OF ASTM A449. NUTS SHALL MEET THE REQUIREMENTS OF AASHTO M291M-12 OR AASHTO M292M-2H. WASHERS SHALL MEET THE REQUIREMENTS OF AASHTO M293M. SHOP DRAWINGS ARE NOT REQUIRED FOR ANCHOR BOLTS, NUTS AND WASHERS. SHOP INSPECTION IS REQUIRED.

ALL SURFACES OF BEARING PLATES SHALL BE SMOOTH AND STRAIGHT.

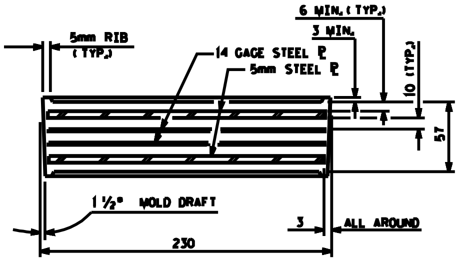


TYPICAL SECTION OF ELASTOMERIC BEARINGS

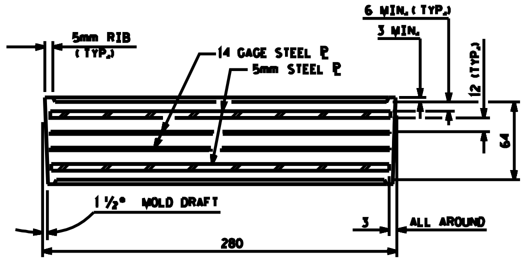


TYPICAL SECTION OF ELASTOMERIC BEARINGS

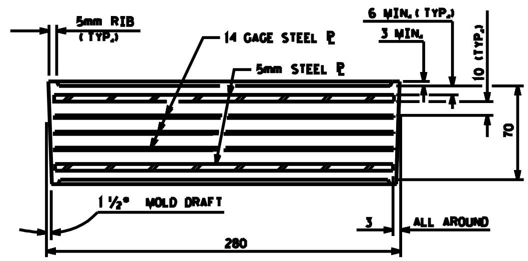


TYPICAL SECTION OF ELASTOMERIC BEARINGS

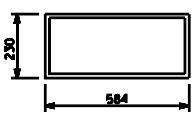


E4 (__ REQ'D)

PLAN VIEW OF ELASTOMERIC BEARING

## TYPE V

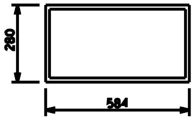


E5 (__ REQ'D)

PLAN VIEW OF ELASTOMERIC BEARING

## TYPE VI

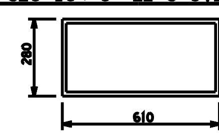


E6 (__ REQ'D)

PLAN VIEW OF ELASTOMERIC BEARING

## TYPE VII

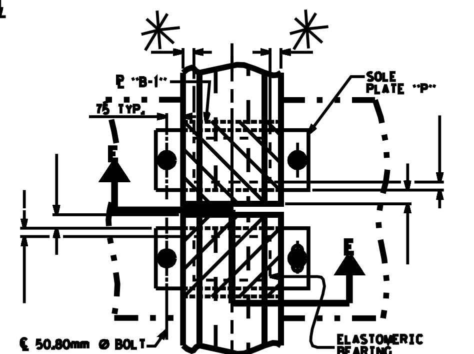


TYPICAL HALF-PLAN (SHOWING CONTINUOUS BENT)

TYPICAL HALF-PLAN (SHOWING SIMPLE SPAN BENT)

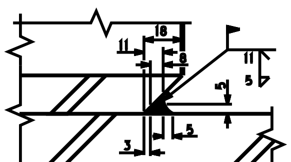


DETAIL "A"

| —LOAD RATINGS— | MAX. D.L. + L.L. |
|---|---|
| TYPE V | 801 kN |
| TYPE VI | 936 kN |
| TYPE VII | 1174 kN |

PROJECT NO. ____________

____________ COUNTY

STATION: ____________

USE .0014 X SCALE
FOR PE SEAL

SOLE PLATE DETAILS ("P")

STATE OF NORTH CAROLINA
DEPARTMENT OF TRANSPORTATION
RALEIGH

STANDARD
ELASTOMERIC BEARING DETAILS
PRESTRESSED CONCRETE GIRDER SUPERSTRUCTURE

| | | | | | | | |
|---|---|---|---|---|---|---|---|
| ASSEMBLED BY : | | DATE : | | | | | |
| CHECKED BY : | | DATE : | | | | | |
| DRAWN BY : EEM 2/97 | | REV. 8/16/99 RWW/LES | | | | | |
| CHECKED BY : VAP 2/97 | | REV. 10/17/00 RWW/LES | | | | | |
| | | REV. 5/1/06 TLA/GM | | | | | |

REVISIONS

| NO. | BY: | DATE: | NO. | BY: | DATE: | SHEET NO. |
|---|---|---|---|---|---|---|
| 1 | | | 3 | | | TOTAL SHEETS |
| 2 | | | 4 | | | |

STD. NO. EB4SM

$$$$$$SYSTIME$$$$$
$$$$$$$$$$$$$$$$$$$$$$$DGN$$$$$$$$$$$$$$$$$$$$$$$
$$$$USERNAME$$$$$